This form is designed to be filled out using Adobe Acrobat. E-Mail completed form to sales@lashersport.com

LASHER SPORT
5720 Arville St. Suite 105
Las Vegas, Nevada 89118
Ph: 907-529-8833
Fax: 702-754-0889

ATH-FS.1 Order Form

0601

Date: _____

PO #: _____

Mark For: _____

Ordered By: _____

Contact: _____

Address: _____

City: _____ State: _____ ZIP: _____

Phone: _____ Fax: _____

E-mail: _____

Shipping Information

Ship to: _____

Address: _____

_____

City: _____ State: _____ ZIP: _____

Provence: _____ Country: _____

Shipping Phone: _____

Shipping Notes: _____

_____

☐ Price Quote Only

☐ I'd Like to Place an Order

Frame Style

☐ Lasher Sport ATH-FS.1 - All Terrain Handcycle $9,995.00
H00FS1
Three wheel independent suspension, recumbent style.
** Max rider weight 220 pounds (100 Kg)*

** A 50% deposit is required at time of order. The Balance is due when the handcycle is ready to ship.*

Frame Dimensions

Seat Width / Rear Wheel Width
Seat Width is measured from inside of seat rails.

Seat Width- 16" (40.6cm), Rear Wheel Width- 33" (83.8cm)

Seat Depth
Measure from front of backrest post to front edge of seat sling.

Adjustable: 14" (35.5cm) - 18" (45.7cm)

Back Height
Measured from seat base to top of backrest.

☐ 18" (45.7cm) - Standard
H01BH18

☐ 22" (55.9cm) - $395
H01BH22

Backrest Angle
Angle measured from floor plane to back plane.

Adjustable: 70° - 90°

Footrest Style

Adjustable with padded ankle slings and Velcro ankle restraints.

Upholstery

Seat: Tension Strap
Back: Tension Strap with 1.25" (3.2cm) foam padding

Crank Arms

☐ Width by crank extenders- Standard
H02CAE ** Less leg clearance with this method vs 'Bull Horn' Style.*

Width- 23.5" (60cm)
Length- 6.8" (170mm)

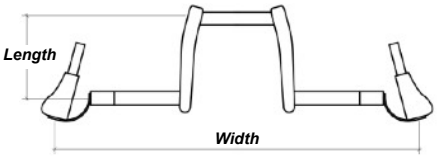

☐ Optional: Custom Welded 'Bull Horn'- $495
H02CABH ** Powder Coated to match frame color.*

Width- 25" (63.5cm)
Length- 7" (175mm)

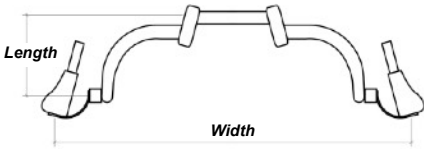

Crank Handles

☐ Ergo Grips, Standard
H03CHE

☐ Quad Grips, Optional- +$695 ** May require additional cost depending on setup.*
H03CHQ

Options and Accessories

Components

** Components below may be substituted for equal or greater value components depending on availability.*

Shift Lever(s)- Shimano SLX 12-speed shifter *(1x12)*
Cassette- Sunrace 11-50T
Crank- Shimano SLX *(Integrated Crank with mid-mount motor option)*
Derailleur- Shimano SLX
Chain- KMC
Headset- Cane Creek 40
Front Wheel Shock- Fox Float DPS Performance
Rear Wheel Shocks- Fox Float DPS Performance
Front Wheel Brake- TRP Quadium
Rear Brakes- Tektro with lockout lever

Wheel Set

** Wheel Set selection must be compatible with Fork and Tire Size below.*

☐ Wire wheel with 6 bolt disc- Standard *(fork compatible with 26", 27.5", and 29er wheel sizes.* ***Not compatible with plus and fat tire sizes. Not for eMotor.****)*
H04WSW

☐ Custom Built Fat and Plus Tire Wheel with 6 bolt disc- Optional, +$1,595 *(fork compatible with 26" Fat Tire, or 27.5"+ and 29er+ wheel sizes.)*
H04WSC

Custom Built Spoke Color: ☐ Silver -S ☐ Black -B

Fork and Tire Size

** Fork and Tire Size selection must be compatible with Wheel Set selection above. We may substitute tire model with comparable tire, see your invoice.*

☐ 26" (559)- Standard
H05TS26S
- ☐ Maxxis Ikon- 26" x 2.2"- Standard -MI
- ☐ Maxxis High Roller II- 26" x 2.25"- NCO -MHR
- ☐ Schwalbe Hans Dampf- 26" x 2.35"- +$125 -SHD

☐ 26" (559) Fat Tire- Optional +$795
H05TS26F
- ☐ Maxxis Minion 26" x 4.0"- Standard -MM
- ☐ Maxxis Colossus- 26" x 4.8"- NCO -MC

☐ 27.5" (650B)- Optional +$495
H05TS27S
- ☐ Maxxis High Roller II- 27.5" x 2.1"- Standard -MHR
- ☐ Maxxis Minion DHR- 27.5" x 2.3"- NCO -MM
- ☐ Schwalbe Hans Dampf- 27.5" x 2.35"- +$125 -SHD

☐ 27.5"+ (650B)- Optional +$595
H05TS27P
- ☐ Maxxis High Roller II Plus- 27.5" x 3.0"- Standard -MHR
- ☐ Maxxis Minion- 27.5"+ x 3.8"Front, 3.0Rear- NCO -MM

☐ 29er (700C)- Optional +$495
H05TS29S
- ☐ Maxxis Rekon- 29er x 2.25"- Standard -MR
- ☐ Maxxis High Roller II- 29er x 2.3"- Standard -MHR
- ☐ Schwalbe Hans Dampf- 29er x 2.35"- +$125 -SHD

☐ 29er+ (700C)- Optional +$595
H05TS29P
- ☐ Maxxis Rekon Plus- 29er+ x 2.8"- Standard -MRP
- ☐ Maxxis Minion- 29er+ x 3.0"- NCO -MM
- ☐ Maxxis Chronicle- 29er+ x 3.0"- NCO -MC

Maxxis Ikon
26" x 2.2"

Maxxis High Roller II
26" x 2.25"
27.5" x 2.1"
29er x 2.3"

Schwalbe Hans Dampf
26" x 2.35"
27.5" x 2.35"
29er x 2.35"

Maxxis Minion
26" Fat x 4.0"
27.5" x 3.0"
27.5" x 3.8"
29er+ x 3.0"

Maxxis Colossus
26" Fat x 4.8"

Maxxis Rekon Plus
27.5"+ x 2.8"
29er+ x 2.8"
Maxxis Rekon
29er x 2.25"

Maxxis Minion DHR
27.5" x 2.3"

Maxxis High Roller II Plus
27.5" x 3.0"

Maxxis Chronicle
29er+ x 3.0"

Tube / Tubeless Setup

☐ Tubes- Standard
H06TUBE

☐ Tubeless- Stan's No Tube System, +$225
H06NOT

Power Option

☐ NO optional power system- Standard

☐ 750watt Electric Power System, mid-mount, Optional- +$2,495
H07P750

750 Watt Motor
17.4Ah (840Wh) Battery
Display w/ Bluetooth for Android and iOS connectivity via downloadable app
Throttle (engages from stopped)
6 Boost settings
System Mounting hardware, Charger, Install, and configuration

☐ 1000watt Electric Power System, mid-mount, Optional- +$2,995
H07P1000

1000 Watt Motor
17.4Ah (840Wh) Battery
Display w/ Bluetooth for Android and iOS connectivity via downloadable app
Throttle (engages from stopped)
6 Boost settings
System Mounting hardware, Charger, Install, and configuration

Accessories

☐ Flag with mount- +$195
H08AFL

☐ Click Strap Seat Belt- +$245
H08ASB

☐ Seat Cushion- Contoured Foam- +$175 ** Standard handcycle includes back rest cushion, but does not include seat cushion.*
H08ASC

☐ UHMW Under Frame Skid Plate- +$395
H08ASP

☐ Rear Mount Platform Rack- +$495 ** Powder Coated to match frame, or request color (requested color may add additional cost).*
H08APR

☐ Rear Mount Platform Rack w/ Wheelchair Carrier Attachment- +$895 ** Powder Coated to match frame, or request color (requested color may add additional cost).*
H08APRWC

☐ Rear Mount Basket Style Rack- +$795 ** Powder Coated to match frame, or request color (requested color may add additional cost).*
H08ABR

☐ Handcycle Hauler- +$2,295 ** USA Only. Requires a 2" Trailer Hitch Receiver- Carries 1 handcycle. Heavy duty aluminum construction. Trailer Hitch Pin not included.*
H08AHH

☐ Handcycle Hauler with 2 bicycle attachment- +$2,995 ** USA Only. Requires a 2" Trailer Hitch Receiver- Carries 1 handcycle plus 2 mountain bikes. Heavy duty aluminum construction. Trailer Hitch Pin not included.*
H08AHH2

Handcycle Dimensions

** Dimensions below are a close approximation but will change depending on wheel and tire size.*

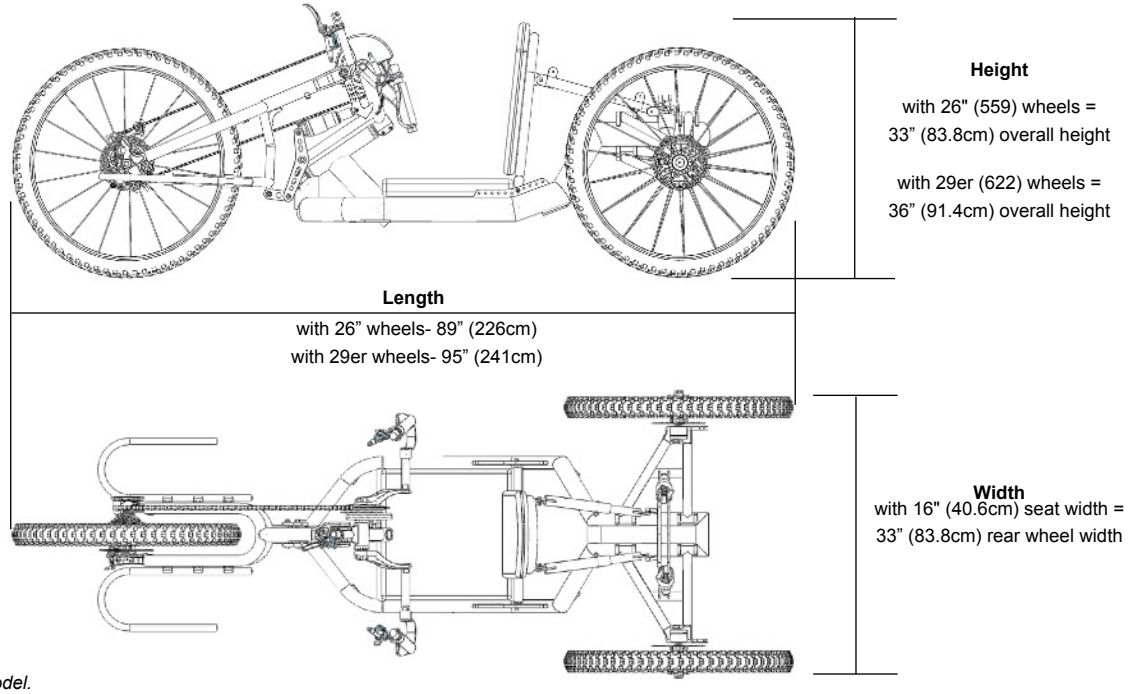

** Graphics are representation of actual model.*

Frame Finish- Color Options

**Powder coat is a baked on finish. *Colors and shades can look different than the samples below.*

☐ Powder Coat Finish, Single Color- Included
H09PCSC
** Select a color from the two columns below.*

☐ Powder Coat Finish, Illusion and Multi-Coat Colors- +$495
H09PCSCI
** Select a color from the two columns below.*

☐ Powder Coat Finish, Two Tone- +$895
H09PCTT
** Select any two colors from this page and list at right.*

Main Frame Color- _____

Suspension Color- _____

☐ Gloss White PSS-5690	☐ Sunshine Yellow PSS-2600	☐ Mega Grey PMB-6831	☐ Ultra Illusion Green PMB-5346
☐ Satin Titanium UMB-1860	☐ Honda Yellow PMB-1657	☐ Illusion True Copper PMB-10044	☐ Illusion Tropical PMB-6919
☐ Heavy Silver PMS-517	☐ Neon Yellow PSS-1104	☐ Light Shattered Glass PPB-6659	☐ Pastel Blue PPB-4559
☐ Galaxy Silver PMB-4936	☐ Kiwi Green PSS-5666	☐ Illusion Malbec PMB-6906	☐ Illusion Pacific PMB-6911
☐ Forged Charcoal UMB-6578	☐ Racer Green PSS-4531	☐ Oxblood Ransom PPB-4537	☐ Aurora Blue PPB-6006
☐ Black Jack (Flat) USS-1522	☐ Tractor Green PSS-4517	☐ Illusion Rootbeer PMB-6924	☐ Illusion Blueberry PMB-6908
☐ Gloss Black USS-2603	☐ Signal Green PSS-2786	☐ Illusion Copper Plus PMB-5043	☐ Illusion Royal PMS-6925
☐ Royal Maroon PSB-5076	☐ Army Green (Flat) PSB-4944	☐ Illusion Red PMS-4515	☐ Lollypop Blue UPS-2502
☐ Vampire Red PSS-3013	☐ Tropical Breeze PSS-6837	☐ Lollypop Red UPS-1506	☐ Dazzling Blue PPB-4329
☐ Really Red PSS-4416	☐ Miami Teal PSB-6532	☐ Illusion Cherry PMB-6905	☐ Bentley Blue PPB-4711
☐ Flame Red PSS-5082	☐ Bic Blue PSB-6932	☐ Indy Orange PPB-6513	☐ Chameleon Sapphire PPB-5729
☐ Sweet Raspberry PSB-6896	☐ Flat Mayham Blue PSB-10025	☐ Illusion Shocker PMB-10050	☐ Lollypop Purple PPS-1505
☐ International Orange PPS-4750	☐ Ford Dark Blue PSB-4624	☐ Flat Shocker Yellow PPB-6524	☐ Illusion Purple PSB-4629
☐ Harley Orange PMB-2829	☐ Sinbad Purple PSS-1676	☐ Illusion Sour Apple PMB-6913	☐ Illusion Violet PSS-4514
☐ Striker Orange PPS-4750	☐ Sweet Plum PSS-1054	☐ Psycho Green PPB-4658	☐ Illusion Pink PMB-10046
☐ Caterpillar Yellow PSS-2550	☐ Whimsy Pink PSS-0874	☐ Illusion Green Ice PMB-7025	☐ Racing Raspberry UPB-6610
☐ Hot Yellow PSS-1623	☐ Lazer Polka Pink PMB-2340	☐ Illusion Money PMB-6917	☐ Corkey Pink PPS-5875