Order Form and Price List: All products must be ordered directly from TopEnd or through an Invacare provider. Our **provider locator** is available at www.topendwheelchair.com

Invacare® Top End® Schulte™ 7000 Series Basketball Wheelchair

Custom frames may have stylistic variations. Dimensional properties and tolerances committed to by Top End are defined in the Measurement Definitions Documents, which can be found in the resource center on www.topendwheelchair.com

PROVIDER / CUSTOMER INFORMATION:

Provider Information:	End User Information:		
Date:	Name:		Height:
IVC Acct #:	Ship to Address:		Weight (lbs.):
Contact:	Address Line 2:		Leg Length (in.):
Phone #:	City:		Hip Width (in.):
Fax/Email:	State:	Zip:	Phone #:
◯ Ship to Provider	◯ Ship to End User		Email:

ORDER REQUEST TYPE:

◯ Quote ◯ Quote and CAD ◯ Order PO #

BASE MODEL:

◯ 10002	Top End Schulte 7000 Series Basketball Wheelchair Note: Chair ordered without wheels, tires, axles or handrims starts at $2,979	$3,149

Assembly: *(see definitions)*

◯ 10048	Assembled	$0

Shipping:

Shipping Fee *(Continental US Only - See definitions)*	$150

FRAME TYPE: *(see definitions)*

◯ 15168	Standard Seat Style Frame	$0
◯ 15169	Tapered Seat Style Frame	$125
◯ 15173	Heavy Duty Standard Seat Style Frame	$500

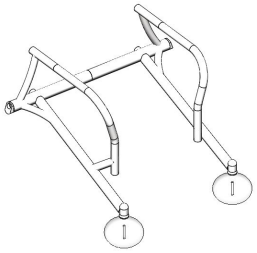

Standard and Heavy Duty Seat Style Frame

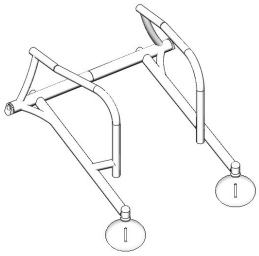

Tapered Seat Style Frame

KNEE WIDTH:

(see diagram below - Only Available with Tapered Seat Style Frame)
Must be at least 3.0" smaller than the Rear Seat Width - *Measured at the widest point of athletes lower leg (inside to inside of the tubing)*

◯ 15133	8.0" Knee Width	$0
◯ 15139	9.0" Knee Width	$0
◯ 15145	10.0" Knee Width	$0
◯ 15146	11.0" Knee Width	$0
◯ 15147	12.0" Knee Width	$0
◯ 15148	13.0" Knee Width	$0
◯ 15151	Custom Knee Width *(See Specials Request Box)*	$45

REAR SEAT WIDTH:

(Measured from outside to outside of the tubing - See Diagram)

◯ 15009	12.0" Rear Seat Width	$0
◯ 15010	12.5" Rear Seat Width	$0
◯ 15011	13.0" Rear Seat Width	$0
◯ 15012	13.5" Rear Seat Width	$0
◯ 15013	14.0" Rear Seat Width	$0
◯ 15014	14.5" Rear Seat Width	$0
◯ 15015	15.0" Rear Seat Width	$0
◯ 15016	15.5" Rear Seat Width	$0
◯ 15017	16.0" Rear Seat Width	$0
◯ 15018	16.5" Rear Seat Width	$0
◯ 15019	17.0" Rear Seat Width	$0
◯ 15020	17.5" Rear Seat Width	$0
◯ 15021	18.0" Rear Seat Width	$0
◯ 15022	18.5" Rear Seat Width	$0

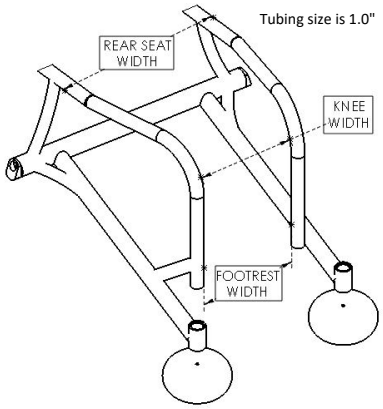

Invacare Corporation Top End Division

All rights reserved. Trademarks are identified by the symbols ™ and ®. All trademarks are owned by or licensed to Invacare Corporation unless otherwise noted. Specifications and prices are subject to change without notification.
©2015 Invacare Corporation

1181425 REV D KPIPARO 11-4-2019

Reset Form Clear All

Invacare® Top End® Schulte™ 7000 Series Basketball Wheelchair

Custom frames may have stylistic variations. Dimensional properties and tolerances committed to by Top End are defined in the Measurement Definitions Documents, which can be found in the resource center on www.topendwheelchair.com

SEAT DEPTH: *(see diagram below)*		
SEAT DEPTH (Upholstery):		
◯ 15038	12.0" Seat Depth, Upholstery	$0
◯ 15040	13.0" Seat Depth, Upholstery	$0
◯ 15042	14.0" Seat Depth, Upholstery	$0
◯ 15044	15.0" Seat Depth, Upholstery	$0
◯ 15046	16.0" Seat Depth, Upholstery	$0
◯ 15048	17.0" Seat Depth, Upholstery	$0
◯ 15050	18.0" Seat Depth, Upholstery	$0
◯ 15052	19.0" Seat Depth, Upholstery	$0
◯ 15399	Custom Seat Depth, Upholstery *(See Specials Request Box)*	$45
EXTRA FRAME DEPTH: *(see definitions)*		
◯ 15142	Standard - 1.0" beginning at end of seat depth	$0
◯ 15400	Custom Extra Frame Depth *(See Specials Request Box)*	$45

BACK HEIGHT: *(see diagram below)*		
ADJUSTABLE:		
◯ 15126	Adjustable 9" to 11"	$0
◯ 15127	Adjustable 10" to 14"	$0
◯ 15128	Adjustable 14" to 18"	$0
FIXED:		
◯ 15101	Fixed at 8.0"	$0
◯ 15103	Fixed at 9.0"	$0
◯ 15105	Fixed at 10.0"	$0
◯ 15107	Fixed at 11.0"	$0
◯ 15109	Fixed at 12.0"	$0
◯ 15132	Custom Fixed Back Height *(See Specials Request Box)*	$45

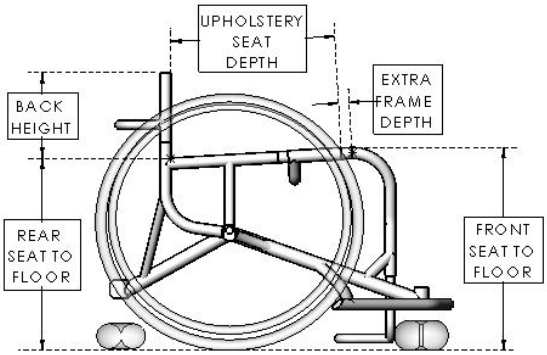

SEAT HEIGHTS: *(see diagram below)*		
FRONT SEAT TO FLOOR:		
◯ 15060	14.5" Front Seat to Floor	$0
◯ 15061	15.0" Front Seat to Floor	$0
◯ 15062	15.5" Front Seat to Floor	$0
◯ 15063	16.0" Front Seat to Floor	$0
◯ 15064	16.5" Front Seat to Floor	$0
◯ 15065	17.0" Front Seat to Floor	$0
◯ 15066	17.5" Front Seat to Floor	$0
◯ 15067	18.0" Front Seat to Floor	$0
◯ 15068	18.5" Front Seat to Floor	$0
◯ 15069	19.0" Front Seat to Floor	$0
◯ 15070	19.5" Front Seat to Floor	$0
◯ 15071	20.0" Front Seat to Floor	$0
◯ 15072	20.5" Front Seat to Floor	$0
◯ 15073	21.0" Front Seat to Floor	$0
◯ 15167	Custom Front Seat to Floor Height *(See Specials Request Box)*	$45
REAR SEAT TO FLOOR:		
◯ 15080	14.5" Rear Seat to Floor	$0
◯ 15081	15.0" Rear Seat to Floor	$0
◯ 15082	15.5" Rear Seat to Floor	$0
◯ 15083	16.0" Rear Seat to Floor	$0
◯ 15084	16.5" Rear Seat to Floor	$0
◯ 15085	17.0" Rear Seat to Floor	$0
◯ 15086	17.5" Rear Seat to Floor	$0
◯ 15087	18.0" Rear Seat to Floor	$0
◯ 15088	18.5" Rear Seat to Floor	$0
◯ 15089	19.0" Rear Seat to Floor	$0
◯ 15090	19.5" Rear Seat to Floor	$0
◯ 15091	20.0" Rear Seat to Floor	$0
◯ 15092	20.5" Rear Seat to Floor	$0
◯ 15093	21.0" Rear Seat to Floor	$0
◯ 15166	Custom Rear Seat to Floor Height *(See Specials Request Box)*	$45

ANTI-TIP:		
◯ 20030	Adjustable Height, Single	$0
◯ 20024	Adjustable Height, Double	$175

WING STYLE:		
◯ 75031	Four Bend Wing	$0

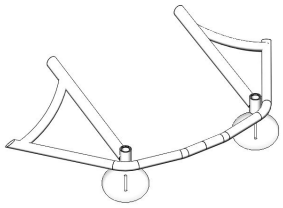

Four Bend Wing

Invacare Corporation Top End Division
All rights reserved. Trademarks are identified by the symbols ™ and ®. All trademarks are owned by or licensed to Invacare Corporation unless otherwise noted. Specifications and prices are subject to change without notification.
©2015 Invacare Corporation

Order Form and Price List: All products must be ordered directly from TopEnd or through an Invacare provider. Our **provider locator** is available at www.topendwheelchair.com

Invacare® Top End® Schulte™ 7000 Series Basketball Wheelchair

Custom frames may have stylistic variations. Dimensional properties and tolerances committed to by Top End are defined in the Measurement Definitions Documents, which can be found in the resource center on www.topendwheelchair.com

FOOTREST: *CHOOSE ONLY 1 STYLE (see definitions) (see diagram)*		
TELESCOPING STYLE:		
◯ 60003	Telescoping Style Footrest Adjustable Height	$0
FOOTREST PLATE:		
◯ 60036	Telescoping, Platform Plate *Offers Most Adjustment*	$58
◯ 60024	Telescoping, No Plastic Cover	$0
◯ 60026	Telescoping, with Plastic Cover	$50
FOOTREST WIDTH:		
◯ 60073	Standard Footrest Width *Seat Width Minus 5.0" (Minimum Footrest Width - 8.0")*	$0
◯ 60078	Custom Footrest Width *(See Specials Request Box)*	$45
FOOTREST HEIGHT FROM FLOOR:		
◯ 60022	1.0" - 5.5" From Floor	$0
◯ 60023	4.0" - 7.0" From Floor	$50
FOOTREST LOCATION:		
◯ 60033	Standard Footrest Location 95 Degrees - Front Frame to Footrest	$0
◯ 60032	Custom Footrest Location *May specify front frame angle or distance from front of footrest to center of headtube.* *(See Specials Request Box)*	$45
UPGRADE OPTIONS:		
◯ 60030	Small Click Strap, Single Pad	$75
SLING SYLE:		
◯ 60035	Sling Style Footrest	$125
FOOTREST PLATE:		
◯ 60025	Sling Upholstery with Plate	$0
FOOTREST PLATE WIDTH:		
◯ 60037	Standard	$0
FOOTREST HEIGHT FROM FLOOR:		
◯ 60022	1.0" - 5.5" From Floor	$0
FOOTREST LOCATION:		
◯ 60033	Standard	$0

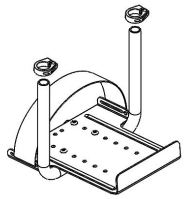

Telescoping Style Footrest *(shown with platform plate)*

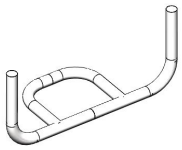

Telescoping Style Footrest *(shown with no plastic cover)*

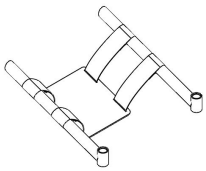

Sling Style Footrest

CAMBER ANGLE: *(see diagram below)*		
◯ 45008	15 Degree Camber	$0
◯ 45009	18 Degree Camber	$0
◯ 45010	20 Degree Camber	$0

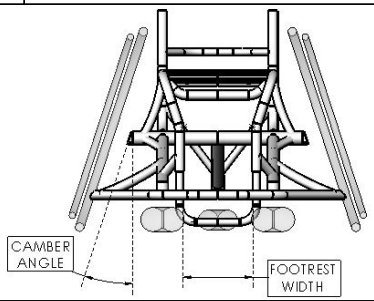

CENTER OF GRAVITY: *(see diagram below)*		
FIXED:		
◯ 45052	Fixed at 4.5" with Welded Backrest	$0
◯ 45053	Fixed at 5.0" with Welded Backrest	$0
◯ 45054	Fixed at 5.5" with Welded Backrest	$0
◯ 45055	Fixed at 6.0" with Welded Backrest	$0
◯ 45056	Fixed at 6.5" with Welded Backrest	$0
◯ 45057	Fixed at 7.0" with Welded Backrest	$0
◯ 45058	Fixed at 7.5" with Welded Backrest	$0
◯ 45059	Fixed at 8.0" with Welded Backrest	$0
◯ 45079	Custom Fixed Center of Gravity *(See Specials Request Box)*	$45
ADJUSTABLE: *(see exclusions)*		
◯ 45075	Adjustable 3" to 5" with Adjustable Angle Bolt - On Backrest	$100
◯ 45076	Adjustable 4" to 6" with Adjustable Angle Bolt - On Backrest	$100
◯ 45080	Adjustable 5" to 7" with Adjustable Angle Bolt - On Backrest	$100

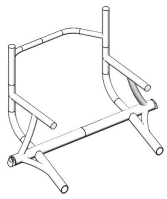

Fixed Center of Gravity

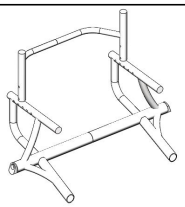

Adjustable Center of Gravity

WHEELBASE: *(see definitions) (see Product Guide - Page 8)*		
◯ 75014	Standard Wheelbase	$0
◯ 75023	Custom Wheelbase *(See Specials Request Box)*	$45

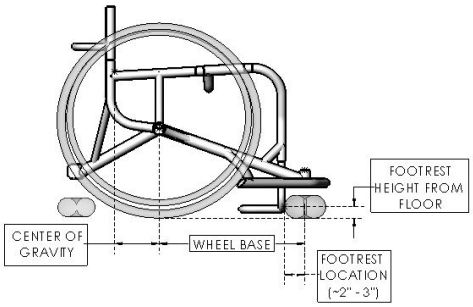

Invacare Corporation Top End Division
All rights reserved. Trademarks are identified by the symbols ™ and ®. All trademarks are owned by or licensed to Invacare Corporation unless otherwise noted.
Specifications and prices are subject to change without notification.
©2015 Invacare Corporation

1181425 REV D KPIPARO 11-4-2019

Reset Form Clear All

Invacare® Top End® Schulte™ 7000 Series Basketball Wheelchair

Custom frames may have stylistic variations. Dimensional properties and tolerances committed to by Top End are defined in the Measurement Definitions Documents, which can be found in the resource center on www.topendwheelchair.com

SIDE GUARDS:		
FIXED ALUMINUM: *(see exclusions)*		
20016	Omit Side Guards	$0
20004	Fixed Aluminum: Clamp - On *(only available with adjustable Center of Gravity)*	$125
20005	Fixed Aluminum: 6" Above Seat	$175
20020	Fixed Aluminum: Same Height as Wheel	$175
20015	Fixed Aluminum: Custom Height *(See Specials Request Box)*	$200
WELDED TUBE: *(see exclusions)*		
20006	Welded Tube, 6" Above Seat	$450
20018	Welded Tube: Custom Height *(See Specials Request Box)*	$475

UPHOLSTERY: *(see definitions)*		
MATERIAL & COLOR:		
30001	Nylon, Black Upholstery	$0
30003	Nylon, Digital Camouflage Upholstery	$75
SEAT UPHOLSTERY STYLE:		
75013	Standard Adjustable Tension Seat Upholstery	$0
75007	Solid Seat	$175
BACK UPHOLSTERY STYLE:		
30012	Adjustable Tension Back Upholstery	$0
30004	Adjustable Tension Back Upholstery with Leather Flaps and Aluminum Dome Plugs *(see definitions)*	$75
SEAT CUSHIONS:		
30005	2" Soft Foam Cushion	$0
30006	3" Soft Foam Cushion	$30
30008	2" Hard Foam Cushion	$50
30009	3" Hard Foam Cushion	$75
30010	4" Hard Foam Cushion	$85

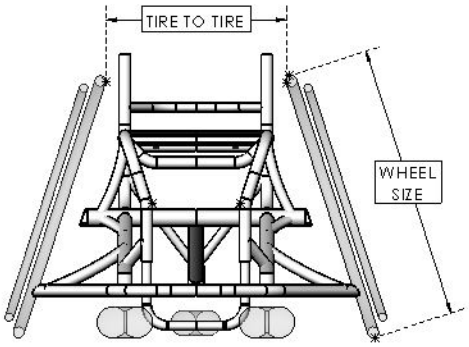

WHEEL SETS: *(see Wheel Size Guide - Page 8 for recommendations)*		
WHEEL SIZE:		
50190	24" (540)	$0
50191	25" (559)	$0
50192	26" (590)	$0
50193	700C	$0
WHEEL STYLE:		
High Performance Wheels:		
50194	Omit Wheels & Axles, Build for HP	-$100 *(credit)*
50196	High Performance	$0
Spinergy Wheels:		
50195	Omit Wheels & Axles, Build for Spinergy	-$100 *(credit)*
50197	Spinergy SLX	$805
50198	Spinergy XSLX	$855
SPOKE COLOR:		
50273	Red	$0
50274	Yellow	$0
50275	Green	$0
50276	Blue	$0
50277	Pink	$0
50278	Purple	$0
50279	Orange	$0
50280	Black	$0
50282	White	$0
50283	Metal (High Performance wheels only)	$0
50281	Custom *(See Page 7)*	$200
HANDRIMS:		
50307	Omit Handrims	-$40 *(credit)*
50297	6 Tabs, Aluminum, Anodized	$0
50299	12 Tabs, Aluminum, Anodized *Spinergy Only*	$80
HANDRIM MOUNTING:		
50308	Standard Mount	$0
50309	Close Mount	$0
50310	Close Mount with Cut Tabs	$68
TIRES:		
50169	Omit Tires	-$30 *(credit)*
50216	Primo Grey	$0
50217	Kenda Red	$30
50218	Kenda Yellow	$30
50244	IRC Grey *700C Wheels Only*	$125
50243	IRC Red *700C Wheels Only*	$125
TIRE TO TIRE:		
15155	Standard Tire to Tire *(Seat Width Plus 2.5")*	$0
15157	Custom Tire to Tire *(See Specials Request Box)*	$45

Invacare Corporation Top End Division
All rights reserved. Trademarks are identified by the symbols ™ and ®. All trademarks are owned by or licensed to Invacare Corporation unless otherwise noted. Specifications and prices are subject to change without notification.
©2015 Invacare Corporation

Order Form and Price List: All products must be ordered directly from TopEnd or through an Invacare provider. Our **provider locator** is available at www.topendwheelchair.com

Invacare® Top End® Schulte™ 7000 Series Basketball Wheelchair

Custom frames may have stylistic variations. Dimensional properties and tolerances committed to by Top End are defined in the Measurement Definitions Documents, which can be found in the resource center on www.topendwheelchair.com

ACCESSORIES:		
STANDARD:		
25065	Rear Frame Protector	$0
25066	Calf Strap	$0
UPGRADABLE:		
SAFETY:		
25005	Front Frame Protector	$40
POSITIONING:		
25001	Click Strap, 8" Small	$75
25002	Click Strap, 10" Medium	$80
25003	Click Strap, 12" Large	$90
APPAREL:		
25084	Lemon Yellow Top End T-Shirt	$20
25085	Grey Top End T-Shirt	$20
25086	Grey Top End Racer Back Tank Top	$20
Please select a size for your shirt selection:		
25087	Extra Small	
25088	Small	
25089	Medium	
25090	Large	
25091	Extra Large	
25092	XX Large	
25093	XXX Large	

FRAME COLOR:			
55018	Black	Wet Black	$0
55019	Black	Black Prism	$0
55017	Black	Stealth Black	$0
55010	Blue	Midnight Blue	$0
55011	Blue	Royal Blue	$0
55012	Blue	Electric Blueberry	$0
55023	Grey	Stealth Grey	$0
55053	Green	Agriculture Green	$0
55008	Green	Grasshopper Green	$0
55054	Green	Neon Green	$0
55006	Orange	Sunkissed Orange	$0
55005	Orange	Simple Orange	$0
55051	Orange	Neon Orange	$0
55015	Pink	Bubblegum Pink	$0
55057	Pink	Neon Pink	$0
55055	Purple	Lilac Purple	$0
55001	Red	Simple Red	$0
55002	Red	Tangerine Red	$0
55003	Red	Raspberry Red	$0
55050	Red	Neon Red	$0
55020	Silver	Silver Metallic	$0
55016	White	White Snow	$0
55007	Yellow	Safety Yellow	$0
55052	Yellow	Neon Yellow	$0
55070	Raw	Buffed Aluminum	$0

Note: All Special requests are subject to approval, additional charges and additional lead time.

Special Request 1)	
Special Request 2)	
Special Request 3)	
Special Request 4)	
Special Request 5)	

E-mail to Top End Order Box

Invacare Corporation Top End Division
All rights reserved. Trademarks are identified by the symbols ™ and ®. All trademarks are owned by or licensed to Invacare Corporation unless otherwise noted. Specifications and prices are subject to change without notification.
©2015 Invacare Corporation

Reset Form Clear All

Order Form and Price List: All products must be ordered directly from TopEnd or through an Invacare provider. Our **provider locator** is available at www.topendwheelchair.com

Invacare® Top End® Schulte™ 7000 Series Basketball Wheelchair

Custom frames may have stylistic variations. Dimensional properties and tolerances committed to by Top End are defined in the Measurement Definitions Documents, which can be found in the resource center on www.topendwheelchair.com

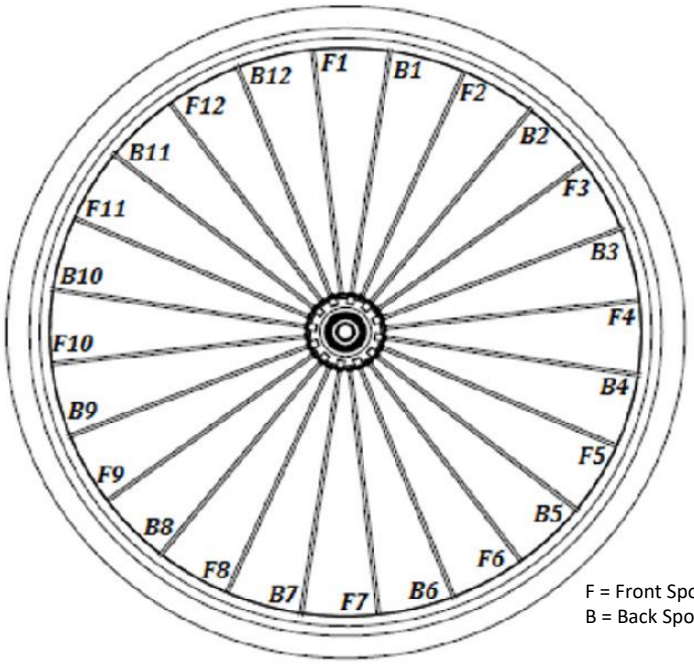

F = Front Spoke
B = Back Spoke

CUSTOM SPINERGY SLX:	
Wheel Size	
Hub Color	

CUSTOM SPINERGY SLX:	
Spoke Color:	
F1	
B1	
F2	
B2	
F3	
B3	
F4	
B4	
F5	
B5	
F6	
B6	
F7	
B7	
F8	
B8	
F9	
B9	
F10	
B10	
F11	
B11	
F12	
B12	

F = Front Spoke
B = Back Spoke

CUSTOM SPINERGY XSLX:	
Wheel Size	
Hub Color	

CUSTOM SPINERGY XSLX:	
Spoke Color:	
F1	
B1	
F2	
B2	
F3	
B3	
F4	
B4	
F5	
B5	
F6	
B6	
F7	
B7	
F8	
B8	
F9	
B9	
F10	
B10	
F11	
B11	
F12	
B12	

Invacare Corporation Top End Division
All rights reserved. Trademarks are identified by the symbols ™ and ®. All trademarks are owned by or licensed to Invacare Corporation unless otherwise noted. Specifications and prices are subject to change without notification.
©2015 Invacare Corporation

Reset Form Clear All

Order Form and Price List: All products must be ordered directly from TopEnd or through an Invacare provider. Our **provider locator** is available at www.topendwheelchair.com

Invacare® Top End® Schulte™ 7000 Series Basketball Wheelchair

Custom frames may have stylistic variations. Dimensional properties and tolerances committed to by Top End are defined in the Measurement Definitions Documents, which can be found in the resource center on www.topendwheelchair.com

PRODUCT GUIDE:

SUGGESTED WHEELBASE:

WHEELBASE BASED ON REAR SEAT TO FLOOR HEIGHT (GREATER OR EQUAL TO 19.0")										
CENTER OF GRAVITY	FIXED	ADJUSTABLE	SEAT DEPTH							
			12.0"	13.0"	14.0"	15.0"	16.0"	17.0"	18.0"	19.0"
	4.5"	--	17.5"	17.5"	18.5"	18.5"	19.5"	20.5"	22.5"	22.5"
	5.0"	3"-5"	17.0"	17.0"	18.0"	18.0"	19.0"	20.0"	22.0"	22.0"
	5.5"	--	16.5"	16.5"	17.5"	17.5"	18.5"	19.5"	21.5"	21.5"
	6.0"	4"-6"	16.0"	16.0"	17.0"	17.0"	18.0"	19.0"	21.0"	21.0"
	6.5"	--	15.5"	15.5"	16.5"	16.5"	17.5"	18.5"	20.5"	20.5"
	7.0"	5"-7"	15.0"	15.0"	16.0"	16.0"	17.0"	18.0"	20.0"	20.0"
	7.5"	--	14.5"	14.5"	15.5"	15.5"	16.5"	17.5"	19.5"	19.5"
	8.0"	--	14.0"	14.0"	15.0"	15.0"	16.0"	17.0"	19.0"	19.0"

WHEELBASE BASED ON REAR SEAT TO FLOOR HEIGHT (LESS THAN 19.0")										
CENTER OF GRAVITY	FIXED	ADJUSTABLE	SEAT DEPTH							
			12.0"	13.0"	14.0"	15.0"	16.0"	17.0"	18.0"	19.0"
	4.5"	--	16.5"	16.5"	17.5"	17.5"	18.0"	19.0"	20.0"	21.0"
	5.0"	3"-5"	16.0"	16.0"	17.0"	17.0"	17.5"	18.5"	19.5"	20.5"
	5.5"	--	15.5"	15.5"	16.5"	16.5"	17.0"	18.0"	19.0"	20.0"
	6.0"	4"-6"	15.0"	15.0"	16.0"	16.0"	16.5"	17.5"	18.5"	19.5"
	6.5"	--	14.5"	14.5"	15.5"	15.5"	16.0"	17.0"	18.0"	19.0"
	7.0"	5"-7"	14.0"	14.0"	15.0"	15.0"	15.5"	16.5"	17.5"	18.5"
	7.5"	--	13.5"	13.5"	14.5"	14.5"	15.0"	16.0"	17.0"	18.0"
	8.0"	--	13.0"	13.0"	14.0"	14.0"	14.5"	15.5"	16.5"	17.5"

WHEEL SIZE GUIDE:

Player Specifications:	Junior's / Short Arms	Adult / 3.0 or Lower	Adult / 3.5 or Higher
Rear Seat Height:	16.0" or less	16.5" to 19.0"	19.0" to 21.0"
Recommended Wheel Size:	24"	25"	26"

EXCLUSIONS:

Adjustable Center of Gravity:	- Not available with Fixed Side Guards or Welded Side Guards.
High Performance Wheels:	- Custom Spoke Colors are not available. - Not available with 12 Tab Handrims.

PRODUCT SPECIFICATIONS:

Weight Capacity:	250 pounds (113 Kilograms) or 350 pounds (159 Kilograms) with the Heavy Duty Option
Approximate Box Weight:	44 pounds (20 Kilograms)
Box Dimensions:	41" x 28" x 28" or 41" x 28" x 33" depending on size of chair.

DEFINITIONS:

Assembly and Shipping:	Arrives factory assembled, rear wheels and some accessories will need to be installed. Shipping rate is $150 for all shipments in the continental US. Freight quotes for shipments outside the continental US are available upon request.
Heavy Duty Frame:	When Heavy Duty is chosen, the frame will be made out of 1-1/8" 7000 series aluminum and the weight capacity is increased to 350 pounds.
Extra Frame Depth:	When Extra Frame Depth is chosen the seat upholstery will stop at the selected Seat Depth and the frame will continue beyond. The extra frame is often used to help transfer in and out of the chair.
Tapered Seat and Footrest Width:	When a tapered seat width is chosen the footrest width will be 2" less than the front seat width unless otherwise noted in the specials section.
Footrest Location:	Measured as the Front Frame Angle (caster headtube to the footrest.
Wheelbase:	Wheelbase is measured from the middle of the rear axle to the middle of the caster head tube.
Upholstery Color:	When camouflage upholstery color is chosen and a seat cushion is chosen, both will be camouflage.
Leather Flap with Aluminum Dome Plugs:	When the Leather Upgrade is chosen the flaps (part of the upholstery that goes goes down over the back posts) will be made of leather. Also, the caps on the backrest post will be aluminum. This is used to help reinforce the back upholstery and help prevent tearing.
Buffed Aluminum Frame:	When the Buffed Aluminum Frame Color is chosen the frame will have no paint. The frame tubes will be run through a buffer and then hand buffed. Decals will be applied. This option is generally chosen when a person wants a natural aluminum color/look to the chair and/ or to avoid the chipped paint look.

Warranty Info:

Invacare warrants the frames when purchased new and unused to be free from defects in materials and workmanship for a period of three (3) years from the date of purchase from Invacare or a dealer, with a copy of the seller's invoice required for coverage under this warranty. Invacare warrants the upholstered materials (seat and back) and remaining components of this product when purchased new and unused to be free from defects in materials and workmanship for a period of thirteen (13) months from date of purchase from Invacare or a dealer, with a copy of the seller's invoice required for coverage under this warranty

Invacare Corporation Top End Division
All rights reserved. Trademarks are identified by the symbols ™ and ®. All trademarks are owned by or licensed to Invacare Corporation unless otherwise noted.
Specifications and prices are subject to change without notification.
©2015 Invacare Corporation